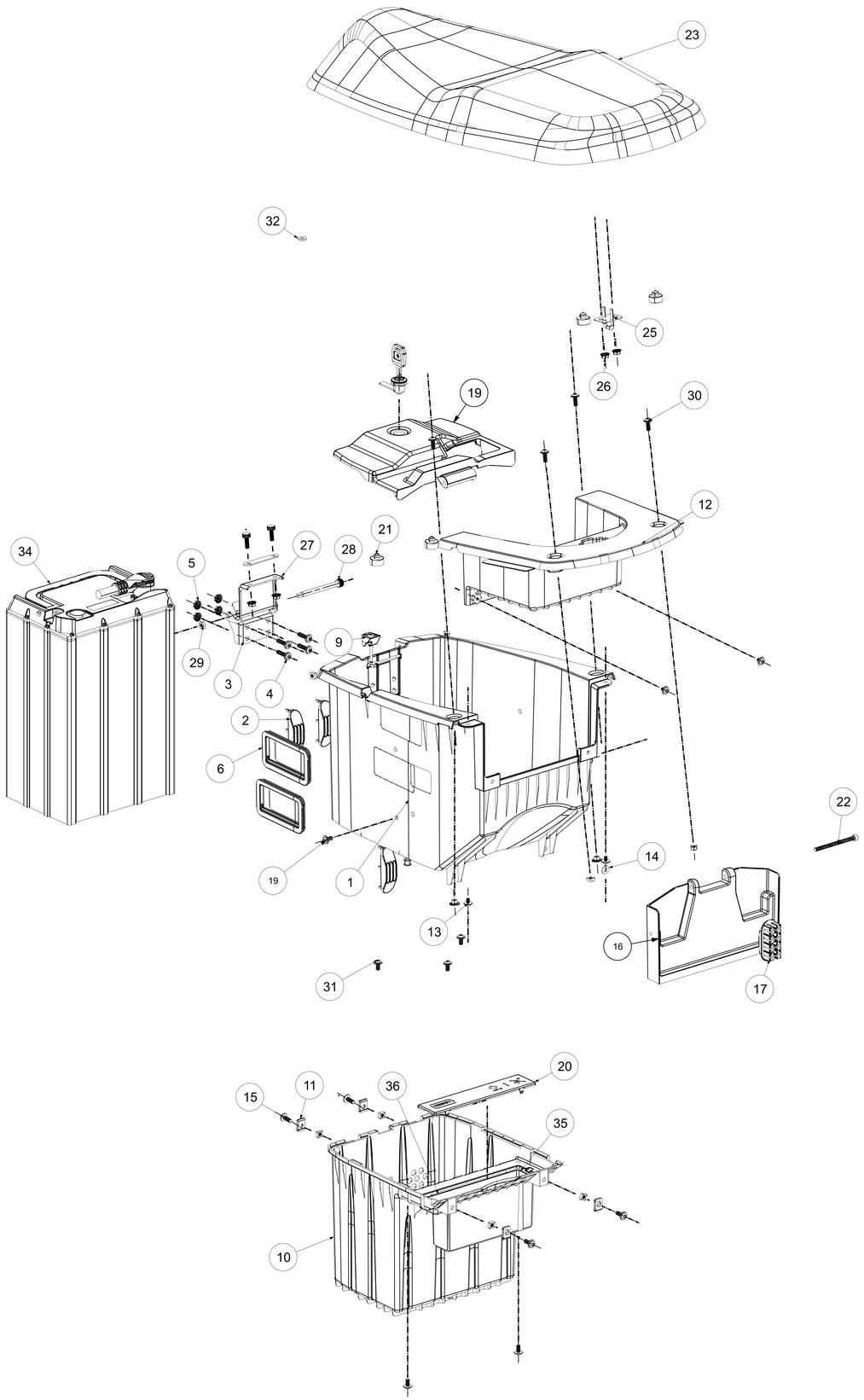SEAT & BATTERY BIN ASSEMBLY